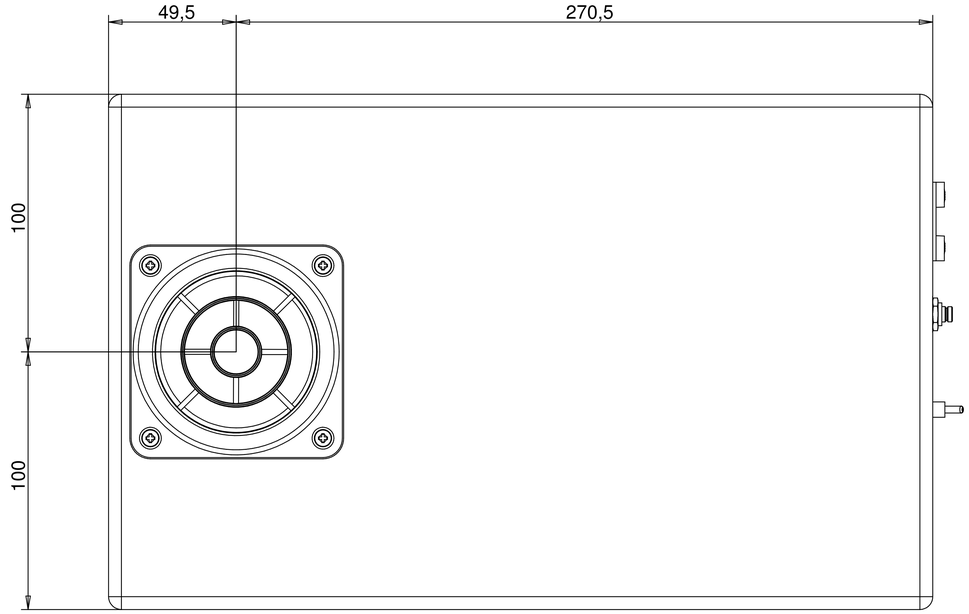
49,5
270,5
100
100

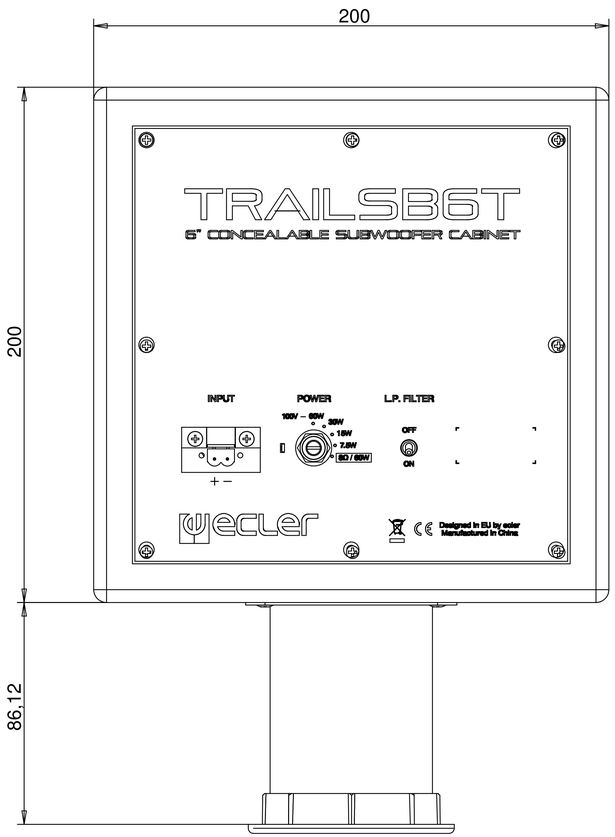
200
200
86,12
TRAILSB6T
6" CONCEALABLE SUBWOOFER CABINET
INPUT
POWER
L.P. FILTER
100V – 60W
30W
15W
7.5W
80 / 60W
OFF
ON
+ –
wecler
Designed in EU by ecler
Manufactured in China

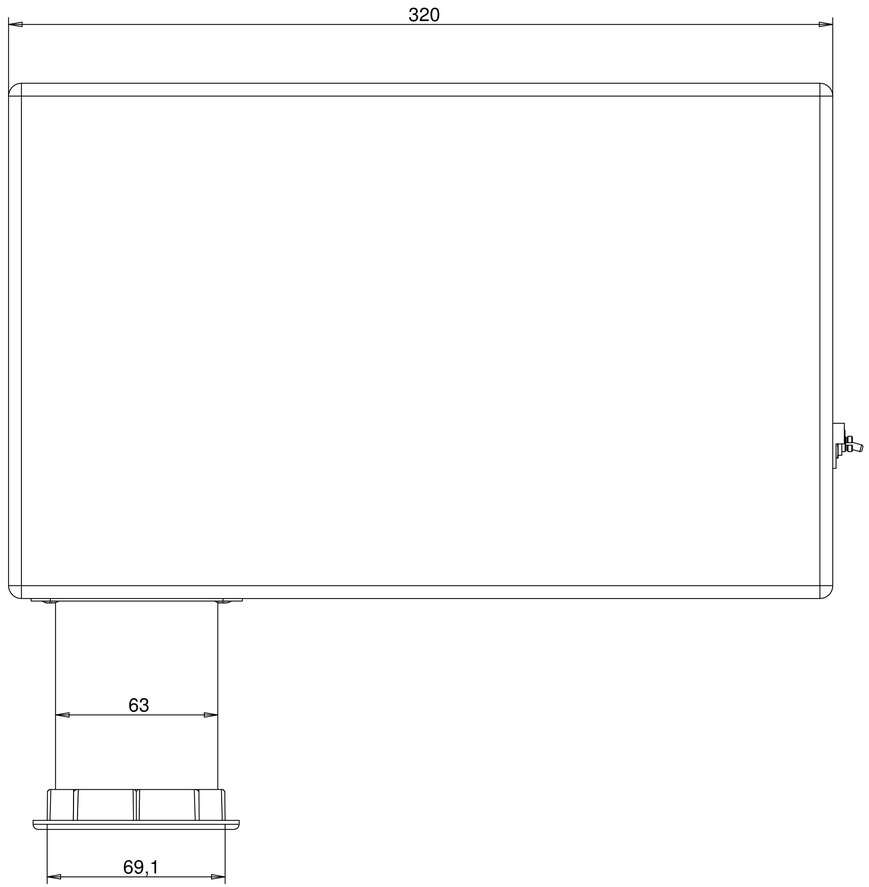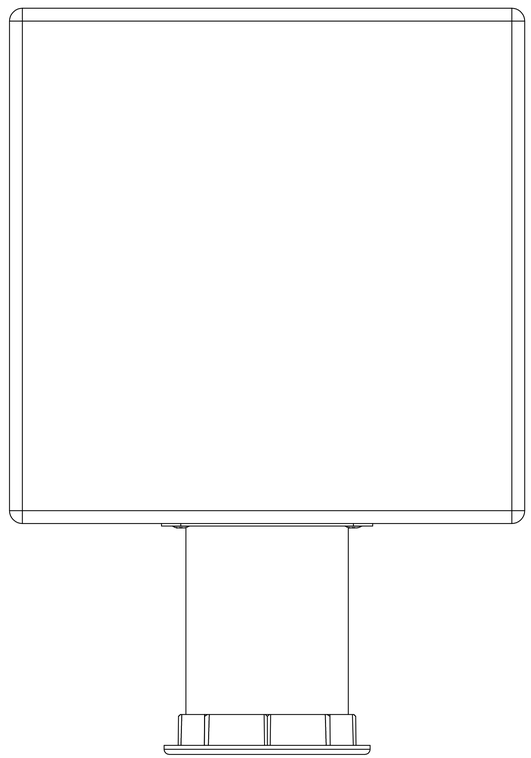
320
63
69,1