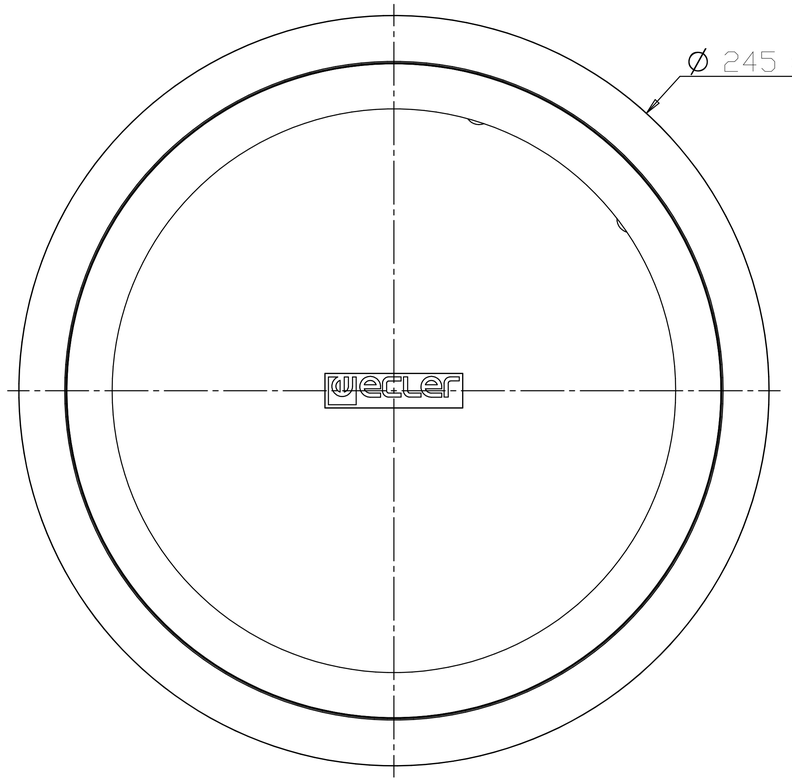
wecler

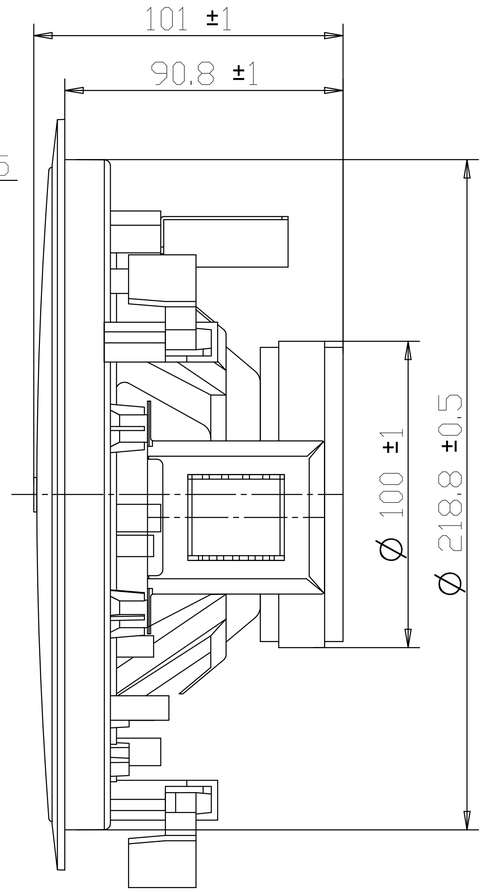
101 ±1
90.8 ±1
Ø 245 ±0.5
Ø 100 ±1
Ø 218.8 ±0.5

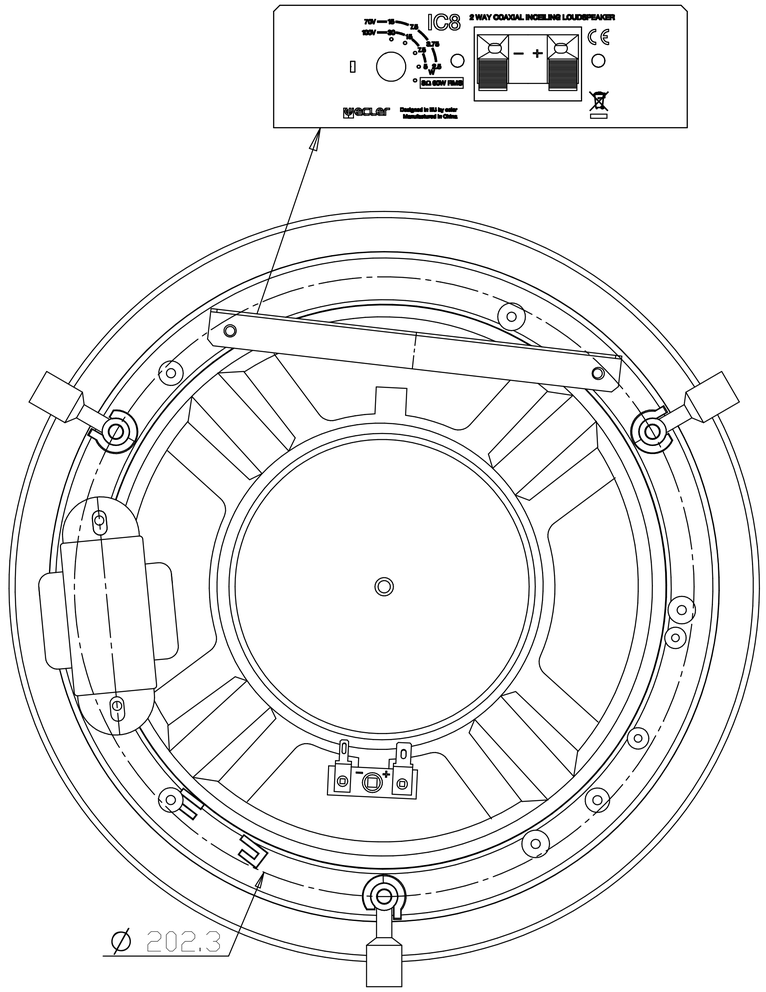
IC8
2 WAY COAXIAL INCEILING LOUDSPEAKER
Ø 202.3