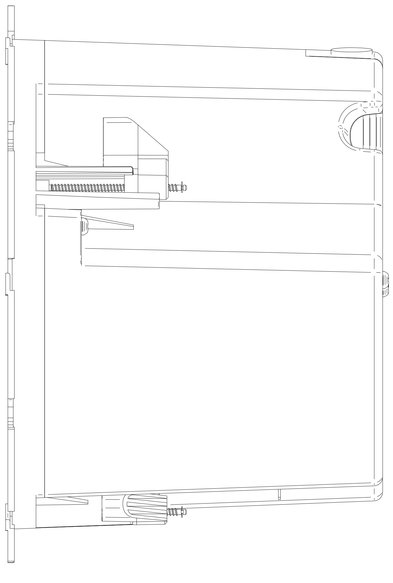

ecler
IC6 CLASS

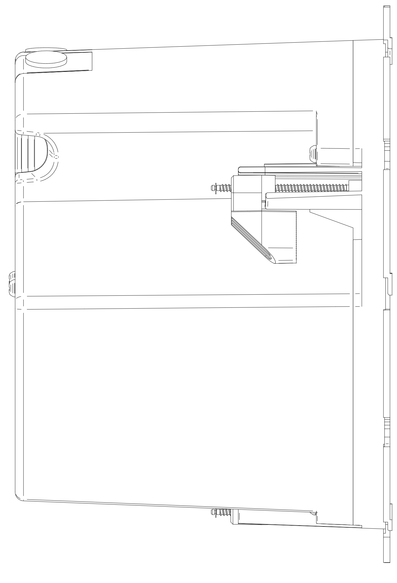

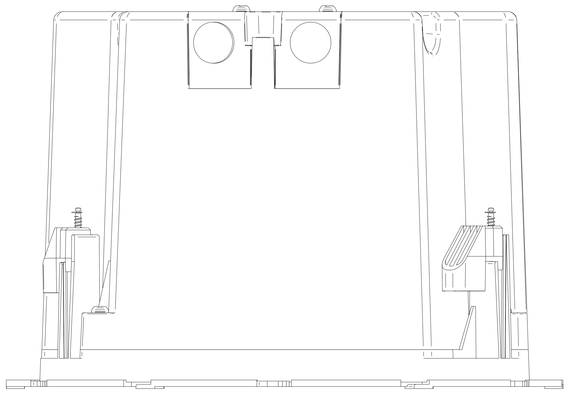

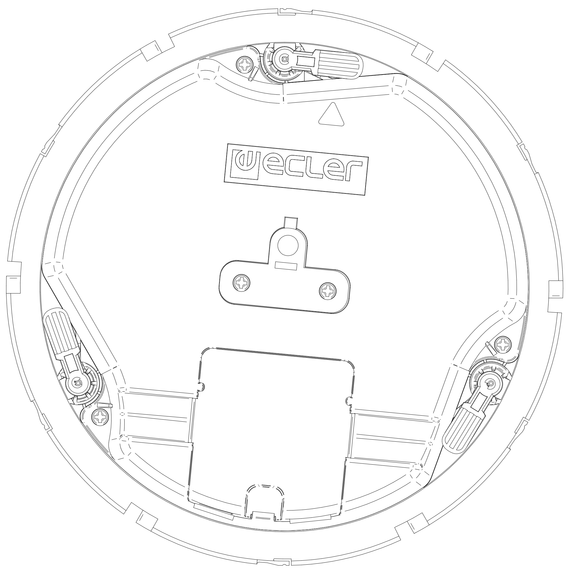
ecler

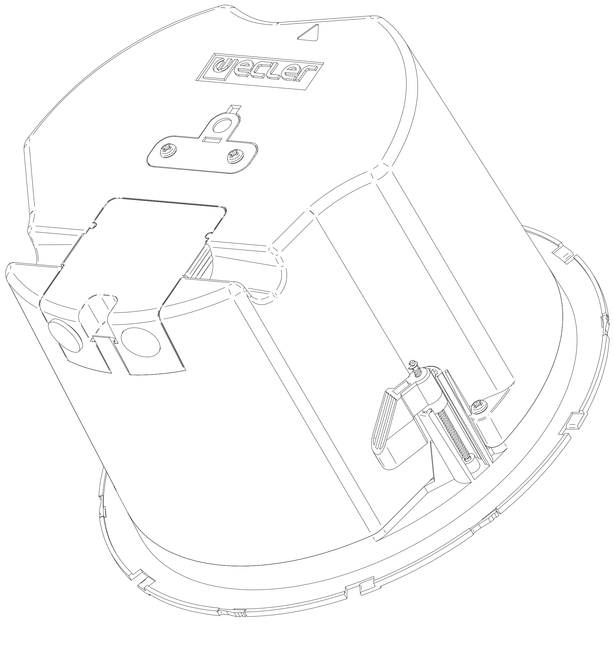
ecler

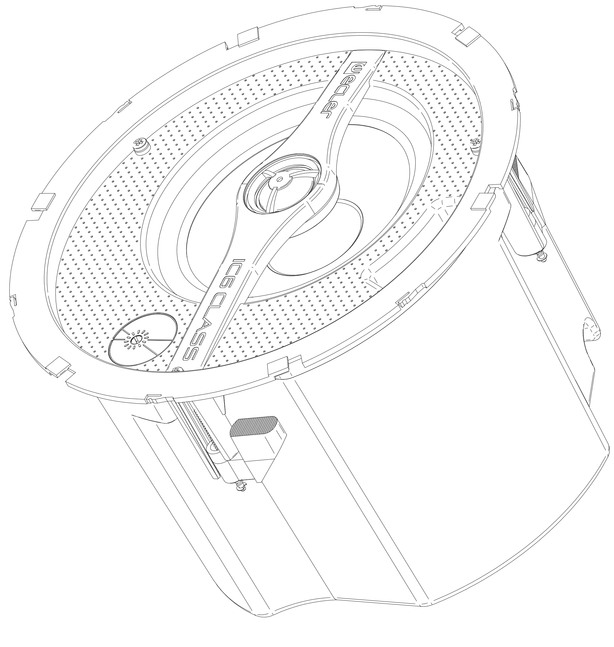
ecler
IC6 CLASS